PART NUMBER	DESCRIPTION	QTY.
PLATE	WALL MOUNT	2
BRACKET	BRACKET	2
M8 x 30LG SCREW	M8 x 30LG SOCKET HEAD SCREW	2
M10 x 40LG SCHS	M10 x 40LG SOCKET HEAD SCREW	2

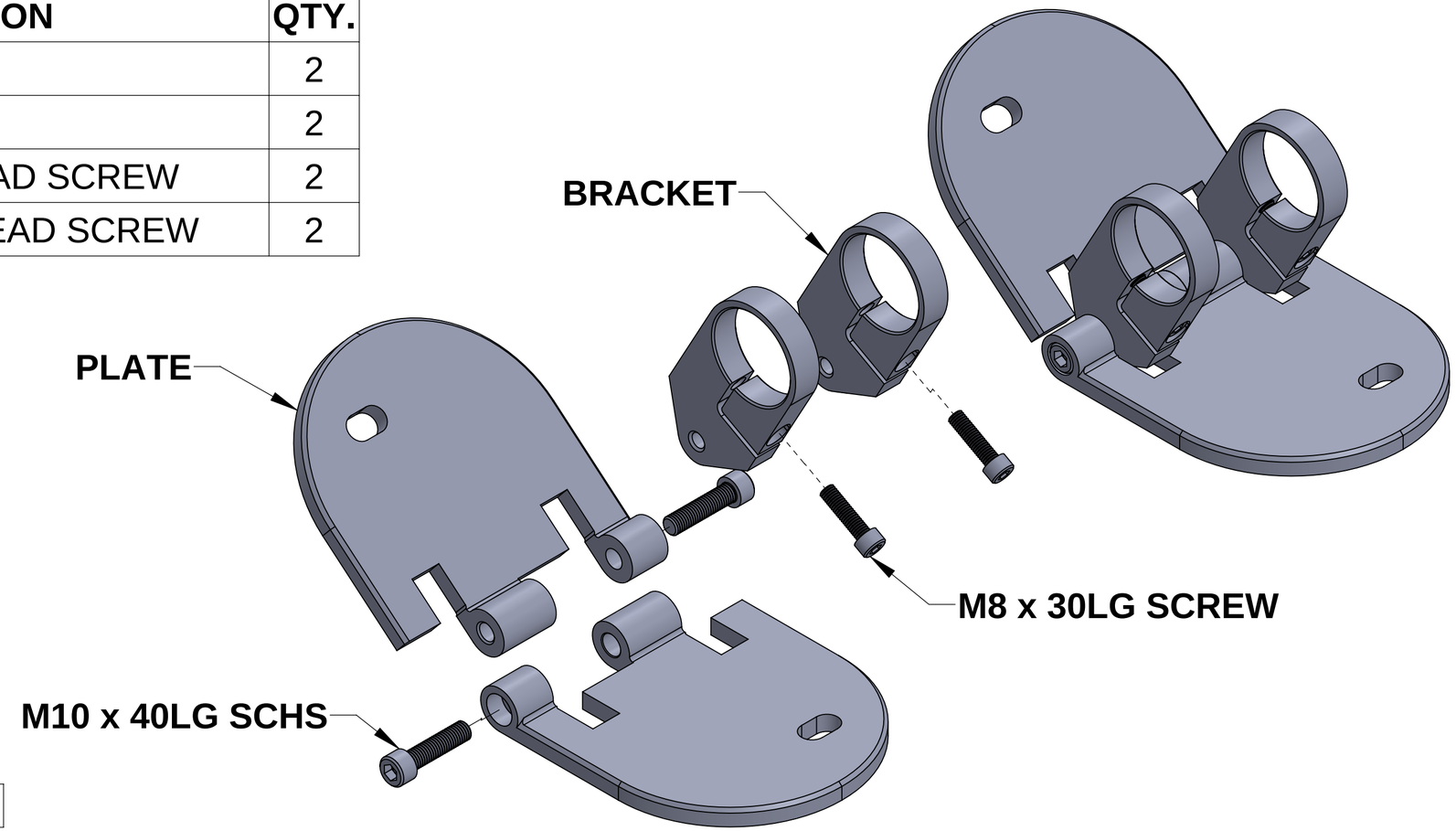

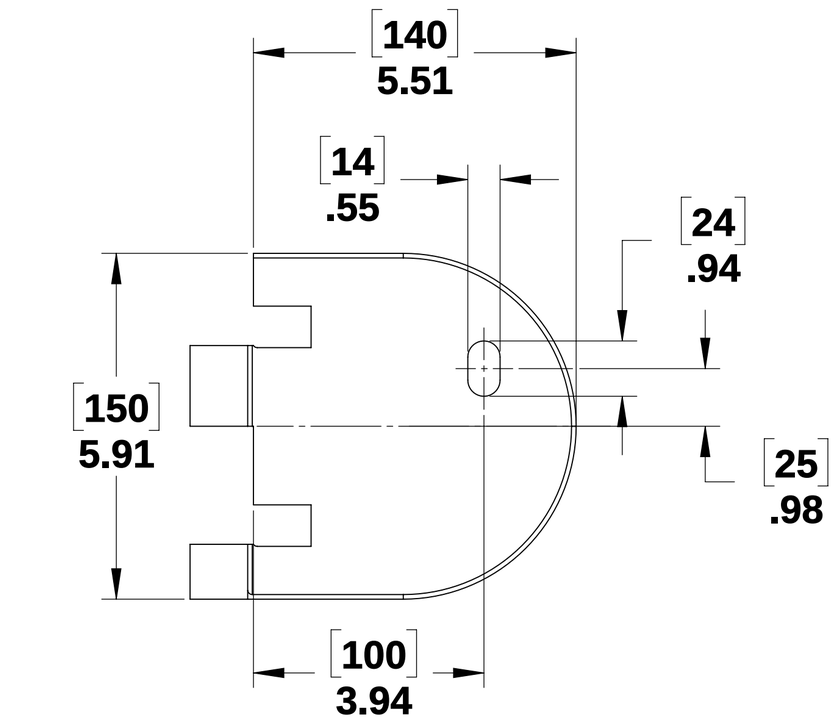

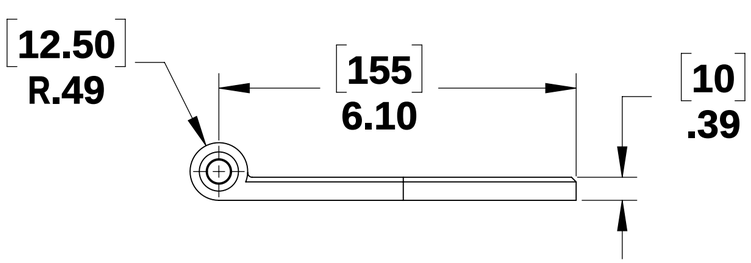

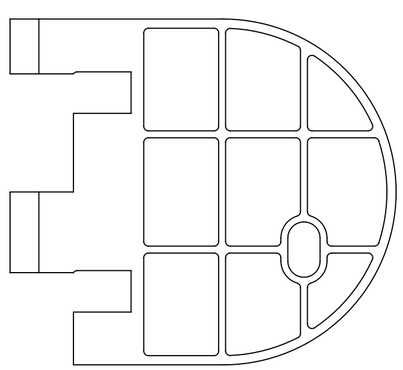

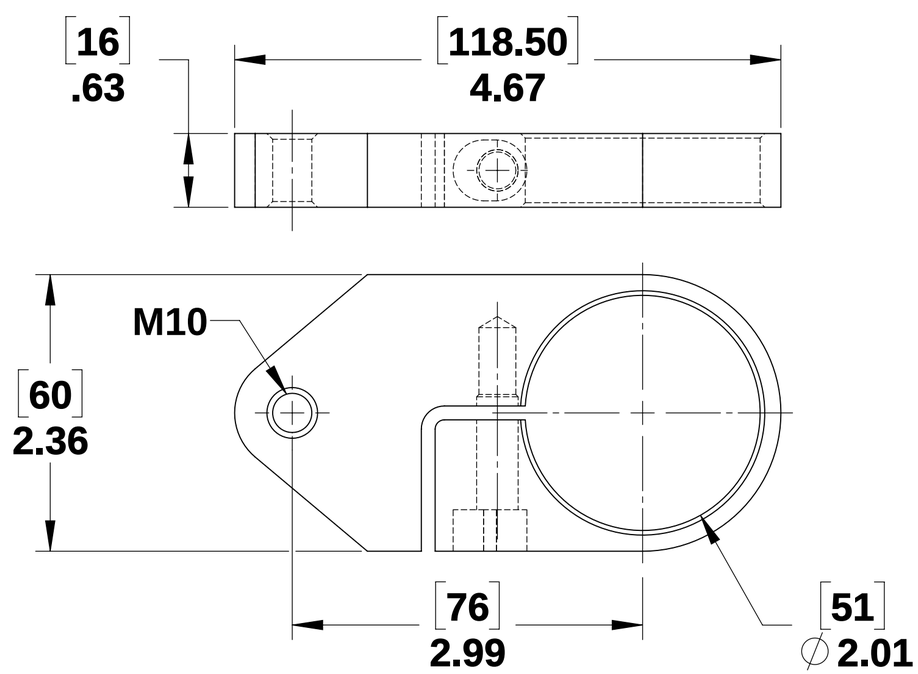

SC&R Stainless Cable & Railing

PROPRIETARY AND CONFIDENTIAL

THE INFORMATION CONTAINED IN THIS DRAWING IS THE SOLE PROPERTY OF STAINLESS CABLE AND RAILINGE. ANY REPRODUCTION IN PART OR AS A WHOLE WITHOUT THE WRITTEN PERMISSION OF STAINLESS CABLE AND RAILINGE IS PROHIBITED.

NOTES: UNLESS OTHERWISE SPECIFIED

1. DUAL DIMENSIONS SHOWN - INCHES [MM].
2. MACHINED SURFACES TO BE 63uIN MAX.
3. PART TO BE FREE OF BURRS AND SHARP EDGES.
4. ALL MATERIAL TO BE CLEAN, DEGREASED AND FREE OF ALL IMPURITIES.
5. ANY CHANGE MUST BE AUTHORIZED BY AN SC&R ENGINEER.

DIMENSIONS ARE IN INCHES
FRACTIONAL ±
ANGULAR: MACH ±
TWO PLACE DECIMAL ±
THREE PLACE DECIMAL ±

MATERIAL

FINISH

	NAME	DATE
DRAWN	SCR	10/31/18
ENG APPR.		
MFG APPR.		

COMMENTS:

TITLE: ADJUSTABLE FASCIA BRACKET FOR 2" OD ROUND SS RAILING SYSTEM

SIZE	DWG. NO.	REV
C	732578	01

SCALE: 1:2 | WEIGHT: | SHEET 1 OF 1